SHEPA

Solar-Hydrogen Energy for Powering Africa

Concept Note | HORIZON-CL5-2027-02-D3-10

Renewable Energy Valleys in Africa | Horizon Europe Work Programme 2026-2027

Budget	Duration	TRL Target	Action Type
~EUR 4.5M	5 Years	TRL 8	Innovation Action

1. Executive Summary

SHEPA (Solar-Hydrogen Energy 4 Powering Africa) is an innovative Innovation Action responding to HORIZON-CL5-2027-02-D3-10. It deploys hybrid Solar PV-Second-Life Battery-Green Hydrogen decentralized microgrid systems across five pilot communities in Kenya and partner African countries, advancing both energy security and the Water-Energy-Food-Ecosystem (WEFE) Nexus.

Building on the original SHEPA concept, this enhanced proposal introduces seven strategic innovations that differentiate it from existing projects: a three-tier hybrid storage architecture using second-life lithium-ion batteries; WEFE Nexus integration through valorization of electrolyzed by-products (oxygen and heat) and Atmospheric Water Generation (AWG); a Community Energy Cooperative (CEC) governance model; a certified African e-waste recycling partnership for circular economy compliance; strengthened EU-AU diplomacy through the LEAP-RE partnership; a Digital Twin and AI-optimized energy management system; and gender-transformative business models including E-Cooking as a Service and women-led micro-enterprise programs.

Together, these innovations position SHEPA as a highly replicable, investment-ready, and socially inclusive model for clean energy transition in Africa, directly aligned with the Global Gateway Strategy and AU Agenda 2063.

2. Background and Rationale

Energy insecurity remains a critical barrier to development across Africa. Over 600 million Africans lack reliable electricity access, and many more face high costs, grid instability, and dependency on fossil fuel imports. Decentralized Renewable Energy Systems (DRES) referred to as Renewable Energy Valleys in the call represent the most viable and efficient solution to these structural barriers.

While solar PV has expanded rapidly, its intermittency and storage limitations remain significant obstacles. Conventional battery systems address short-term storage but cannot provide long-duration, seasonal storage required for full energy independence. Green hydrogen bridges this gap, offering high-capacity, cycle-degradation-free storage with multiple end uses including electricity, heat, and ammonia fertilizer production.

The original SHEPA proposal identified the following key challenges addressed by this project:

- Limited energy access and energy security across rural, peri-urban, and urban African communities
- High upfront costs and financing barriers preventing adoption of clean energy solutions
- Technical and infrastructure challenges including grid instability and lack of locally adapted solutions
- Policy, regulatory, and institutional hurdles at national and regional levels
- Socio-economic and community barriers, including exclusion of women and marginalized groups
- Climate resilience and WEFE Nexus challenges, including water scarcity and food insecurity
- Knowledge and innovation gaps in hybrid system design and management
- Fair trade imbalances between Africa and Europe in the clean energy value chain

3. Key Innovations: What SHEPA Brings That Does Not Yet Exist

In line with the call's explicit requirement for innovative approaches that go beyond the current state of the art, SHEPA proposes seven distinct and evidence-based innovations:

3.1 Three-Tier Hybrid Storage Architecture

Most existing Renewable Energy Valley projects rely on a single storage medium, typically lead-acid or lithium-ion batteries. SHEPA introduces a three-tier hybrid storage architecture that is both more resilient and more cost-efficient:

- Tier 1 - Solar PV (Primary Generation): High-efficiency monocrystalline panels, locally installed, providing the primary energy input.
- Tier 2 - Second-Life Li-ion Batteries (Short-Term Storage): Repurposed electric vehicle batteries are integrated for diurnal (day-night) energy buffering. This approach reduces upfront capital costs by 30–40% versus new batteries while keeping end-of-life EV batteries in productive use rather than landfill, directly advancing the circular economy mandate in the call.
- Tier 3 - Green Hydrogen via PEM Electrolyzer (Long-Term Seasonal Storage): Excess solar energy is converted to hydrogen via a Proton Exchange Membrane electrolyzer and stored in modular tanks. Hydrogen is reconverted to electricity via fuel cells during prolonged low-generation periods (cloud cover, rainy seasons). Unlike batteries, hydrogen storage is not subject to cycle degradation and scales independently of power capacity.

This architecture achieves TRL 8 by project end, as each component is individually mature and the integrated system is validated through real-world pilot deployment.

3.2 WEFE Nexus Integration: Valorizing By-Products and Atmospheric Water Generation

The call explicitly requires a Water-Energy-Food-Ecosystem (WEFE) Nexus approach. SHEPA operationalizes this at the technical level through two integrated mechanisms:

By-Product Valorization

PEM electrolysis produces oxygen and heat as by-products that are typically vented as waste. SHEPA redirects these:

- Oxygen (O_2): Supplied to local health clinics for medical use or to aquaculture ponds to enhance fish yields, creating an additional income stream for the cooperative.
- Heat: Directed to greenhouse vegetable production via heat exchangers, extending growing seasons and improving food security.
- Ammonia fertilizer: Excess hydrogen is used for small-scale Haber-Bosch ammonia synthesis, providing affordable locally produced fertilizer for community agriculture, reducing dependence on imported inputs.

Atmospheric Water Generation (AWG)

A critical concern in hydrogen production is its water demand. In water-scarce African contexts, this could conflict with drinking water access. SHEPA resolves this through the integration of Solar-Powered Atmospheric Water Generation (AWG) units, which extract humidity from ambient air to supply the electrolyzer. This ensures:

- Zero competition with local groundwater or surface water for hydrogen production
- Provision of safe drinking water as an additional community benefit in water-stressed pilot sites
- Full compliance with the call's WEFE Nexus requirement and its biodiversity/ecosystem protection mandate

3.3 Community Energy Cooperative (CEC) Governance Model

Existing renewable energy projects in Africa frequently fail at scale due to weak governance and lack of community ownership. SHEPA pilots a Community Energy Cooperative (CEC) model, a governance innovation adapted from EU Renewable Energy Community (REC) frameworks and validated for African socio-economic and regulatory contexts.

Under the CEC model:

- Community members become co-owners of the energy infrastructure through equity shares, financed via micro-investment schemes and development finance instruments.
- A CEC board including women, youth, and local authority representatives governs tariff-setting, maintenance contracts, and profit-sharing.
- Revenue streams include electricity tariffs, oxygen sales, fertilizer sales, e-mobility charging, and battery-swapping services.
- A dedicated legal and regulatory work package, in collaboration with national authorities, will develop the enabling frameworks needed to replicate this model on scale.

Partner organizations with existing community cooperative networks including African universities, NGOs, and rural electrification agencies will co-lead pilot CEC establishment and provide implementation sites.

3.4 Circular Economy: Certified African E-Waste Recycling Partnership

The call requires a circular economic approach and life cycle analysis taking a cradle-to-grave viewpoint. SHEPA goes beyond analysis by establishing a formal partnership with certified African e-waste recyclers from project inception, ensuring:

- Recovery and recycling of lithium from second-life batteries at end of project life
- Recovery of silicon from PV panels at decommissioning
- Compliance with EU Battery Regulation and applicable African national environmental regulations
- Creation of a replicable recycling value chain that can be documented and disseminated to the sector

This partnership is a unique and demonstrable differentiator that directly addresses the call's circular economy and negative impact mitigation requirements.

3.5 EU-AU Diplomacy: LEAP-RE Partnership, Global Gateway, and AU Agenda 2063

The call explicitly requires participation in and contribution to the AU-EU collaborative research action on Climate Change and Sustainable Energy, specifically through collaboration with the LEAP-RE project. SHEPA strengthens this through three specific actions:

- Standards Harmonization: SHEPA will work with LEAP-RE to co-develop harmonized technical standards for hydrogen microgrid systems applicable across AU member states, accelerating regulatory approval for future scale-up.
- Business Model Validation: Renewable Energy Community business models from EU member states (Italy, Germany, Denmark) will be systematically assessed, adapted, and validated for African CEC contexts, creating an evidence base for pan-African policy adoption.
- Global Gateway and AU Agenda 2063 Alignment: SHEPA's market and business strategy explicitly maps its activities to Global Gateway investment corridors in East Africa and to AU Agenda 2063 Priority 1 (A Prosperous Africa) and Priority 6 (An Africa whose development is people-driven). This framing maximizes the project's visibility and leverage for blended finance from the EU-Africa Infrastructure Trust Fund and African Development Bank instruments.

3.6 Digital Twin and AI-Optimized Energy Management System (EMS)

A core technical challenge in multi-storage hybrid microgrids is the optimal dispatching of energy across Solar PV, battery, and hydrogen storage under variable weather and demand conditions. SHEPA proposes the creation of a Digital Twin of each pilot site, an innovation that does not present in current comparable projects:

- Digital Twin: A physics-based simulation model of each pilot microgrid, incorporating real-time sensor data from PV panels, batteries, electrolyzers, fuel cells, and AWG units.

The Digital Twin enables virtual testing of operational scenarios before deployment and continuous performance benchmarking.

- AI-Optimized EMS: A machine learning-based Energy Management System trained on local weather data, seasonal demand patterns, and economic parameters (e.g., hydrogen prices, battery degradation rates) to optimize the switching logic between the three storage tiers in real time.
- Open-Access Platform: All Digital Twin models, AI training datasets, and EMS algorithms will be published as open-access resources upon project completion, contributing to the call's knowledge dissemination objectives and enabling replication by other African DRES projects.
- Copernicus Integration: Satellite-based weather forecasting data from Copernicus will be integrated into the AI-EMS, ensuring compliance with the call's eligibility requirements for satellite data use.

3.7 Gender-Transformative Business Models

The call specifically notes that a gender-sensitive approach is needed, targeting women and rural communities as vulnerable groups. SHEPA adopts a gender-transformative (rather than merely gender-sensitive) approach, moving from risk mitigation to active empowerment through dedicated business lines designed with and for women:

E-Cooking as a Service (ECaaS)

Indoor air pollution from charcoal and wood cooking is the leading cause of household health burden for women and children in sub-Saharan Africa. SHEPA will:

- Lease smart induction cookers to women-headed households on a pay-as-you-cook tariff, powered by the community microgrid
- Eliminate charcoal expenditure, improving household economics and reducing deforestation
- Train women as ECaaS agents, creating a local distribution and maintenance micro-enterprise network

E-Mobility for Market Logistics

- Lease electric tricycles (e-tuk-tuks) to women-led market trader associations, replacing expensive fossil fuel transport for agricultural produce
- Integrate e-tricycle charging at CEC energy kiosks, creating an anchor demand load that improves microgrid economics

Battery-as-a-Service (BaaS) Kiosks

- Women-operated battery-swapping kiosks for small electronics, lanterns, and mobile phones, a proven revenue model adaptable to the second-life battery infrastructure

Cold Chain for Women Farmers

- Solar-powered cold storage units managed by women farmer cooperatives, reducing post-harvest losses and enabling premium market access for perishable produce

Gender disaggregated data collection, monitoring, and evaluation will be embedded across all project work packages, with dedicated gender indicators reported to the EU Commission.

4. System Architecture

The SHEPA integrated system is designed as a layered, modular architecture. Six functional layers: Generation & Sensing, Storage & Power Conversion, Intelligence & Management, WEFE Nexus By-Products, Community Distribution & End Uses, and Circular Economy & Governance are interconnected through a central DC/AC bus bar and governed by an AI-based Energy Management System (EMS). The architecture diagram below illustrates all sub-systems, data flows, power flows, and by-product valorization pathways.

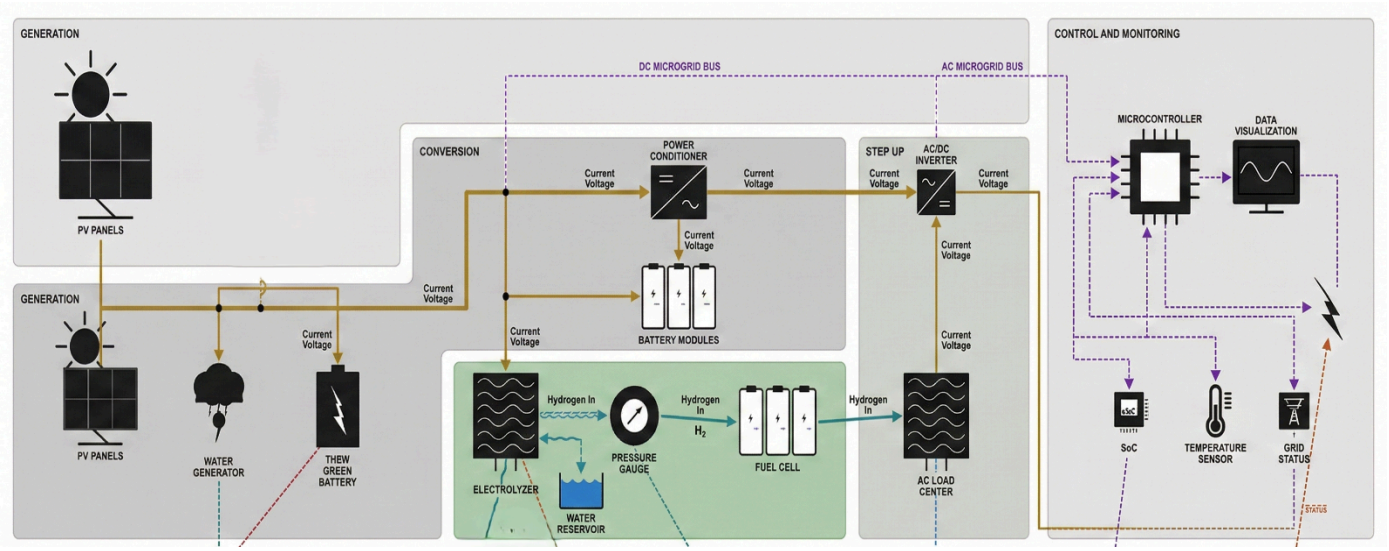

Figure 1: SHEPA Integrated System Architecture, Six-Layer Microgrid Design with WEFE Nexus and Circular Economy Integration

4.1 Layer 1 Generation & Sensing

The primary energy source is a monocrystalline Solar PV array, sized depending on site load profiles and community scale. The array output feeds directly to the DC/AC bus bar. An Atmospheric Water Generator (AWG) unit, itself solar-powered, extracts moisture from ambient air to supply process-grade water to the PEM electrolyzer, eliminating any dependency on groundwater or surface water. A dedicated weather station collects real-time irradiance, ambient temperature, humidity, and wind speed data. These are supplemented by Copernicus satellite-derived solar irradiance forecasts, enabling the AI-EMS to anticipate generation shortfalls up to 72 hours ahead. The Digital Twin Platform ingests all sensor and satellite data to maintain a continuously updated physics-based simulation of the microgrid state.

4.2 Layer 2 Storage & Power Conversion

SHEPA employs a three-tier storage architecture, each tier serving a distinct temporal role:

- Tier 1 Solar PV (Immediate Generation): DC power is injected directly into the bus bar to meet instantaneous load demand. Surplus DC power is directed to Tier 2 or Tier 3 storage by the AI-EMS.
- Tier 2 Second-Life Li-ion Battery Bank (Short-Term / Diurnal Storage): Repurposed electric vehicle battery packs are assembled into 48V to 800V DC racks. Capacity is sized for 24 to 48 hours of community baseload, covering overnight demand and short cloudy periods. The AI-EMS monitors each cell's State of Charge (SOC), State of Health (SOH), and temperature, applying adaptive charge/discharge profiles to maximize remaining useful life.

This tier is cost-effective: second-life cells cost 30-40% less than new cells, reducing capital expenditure while diverting waste from landfill.

- Tier 3 Green Hydrogen via PEM Electrolyzer and Compressed Storage (Long-Term / Seasonal Storage): When both immediate demand and battery bank are satisfied, surplus DC power drives a Proton Exchange Membrane (PEM) electrolyzer at 3.5-8 bar operating pressure. The electrolyzer converts water to hydrogen (H_2) and oxygen (O_2) at 65–80% efficiency. The H_2 is compressed to 350–700 bar via a cascade compression system and stored in modular type IV composite tanks. Unlike batteries, hydrogen storage capacity scales independently of power capacity and exhibits no cycle degradation. During prolonged low-generation periods (cloudy weeks, rainy seasons), the PEM Fuel Cell Stack reconverts stored H_2 to AC electricity at 40-60% efficiency, discharging back to the bus bar. The by-products of both electrolysis (O_2, heat) and fuel cell operation (heat, water) are captured and valorized in Layer 4.

A Bi-directional Inverter and Grid Interface unit manages DC-to-AC and AC-to-DC conversion, power quality (frequency and voltage regulation), protection switching, and where applicable optional connection to a weak national grid. Smart meters at this point record energy flows for SCADA and CEC accounting.

4.3 Layer 3 Intelligence & Management

The AI Energy Management System (EMS) is the operational brain of the microgrid. It implements a hierarchical dispatch algorithm that continuously evaluates the cost and reliability of each storage tier against real-time, and 72-hour forecast data:

- Priority 1 (Solar Direct): Satisfy load directly from solar generation whenever irradiance is sufficient. Surplus exported to battery bank.
- Priority 2 (Battery Dispatch): If solar generation is insufficient, draw from the battery bank. Battery dispatch is constrained by SOC lower limits (typically 20%) and degradation-aware charge/discharge rates.
- Priority 3 (Hydrogen Dispatch): If battery SOC falls below threshold and forecast confirms extended low generation, the fuel cell stack is activated to discharge hydrogen reserves. The AI-EMS uses a minimum-cost scheduling algorithm that weighs hydrogen depletion against expected solar recovery and community tariff signals.

The IoT Sensor Network and SCADA layer aggregates real-time telemetry — voltage, current, SOC, H_2 pressure, electrolyzer flow rates, fuel cell power output, AWG water levels, and ambient conditions across all components. Data is transmitted via GSM (primary) with LoRaWAN mesh as a resilience fallback. All data is streamed to the Cloud Data Platform, where it is stored as time-series records, processed for anomaly detection, and used to continuously retrain the AI-EMS predictive models.

The CEC Metering & Payment module connects smart meters to a mobile money platform (M-Pesa and USSD for feature phones), enabling household-level energy accounting, pay-as-you-go tariff collection, and transparent revenue reporting to the CEC board. A Cybersecurity layer enforces IEC 62351-compliant encrypted communications across all SCADA channels and implements intrusion detection with automated audit logging.

4.4 Layer 4 WEFE Nexus By-Product Valorization

Defining technical innovation of SHEPA is the systematic valorization of process by-products generated by the electrolyzer and fuel cell stack, operationalizing the WEFE Nexus at the component level:

- Oxygen (O_2): The PEM electrolyzer produces approximately 8 kg of O_2 per kg of H_2. This O_2 is captured, compressed, and supplied via small-bore distribution lines to community health clinics (medical-grade O_2) and to aquaculture ponds (aeration), directly replacing expensive bottled O_2 imports and improving fish yields.
- Thermal Energy (Heat): Both the electrolyzer stack and the fuel cell stack reject heat at 60–80°C. Plate heat exchangers capture this thermal output and transfer it to greenhouse heating circuits, extending growing seasons for vegetable production. Excess heat is directed to post-harvest crop drying.
- Ammonia Fertilizer (NH_3): Communities with significant agricultural needs can benefit from a modular micro-Haber-Bosch synthesis unit, fed by excess H_2 and atmospheric N_2. This unit produces ammonium nitrate fertilizer locally, eliminating supply chain dependencies for one of Africa's most critical agricultural inputs.
- Potable Water: The AWG unit produces water in excess of electrolyzer process requirements, particularly in humid climates. The surplus is filtered, mineralized, and directed to community drinking water supply, addressing water security in water-stressed pilot sites simultaneously with energy provision.
- Fuel Cell Water Output: PEM fuel cells produce liquid water as a reaction by-product, which is collected and recycled as feedstock to the electrolyzer, further reducing net water consumption.

An Ecosystem Monitoring work package establishes biodiversity and land-use baselines at each pilot site before installation and tracks key indicators throughout the project, ensuring compliance with the call's requirement to address biodiversity and environmental impacts.

4.5 Layer 5 Community Distribution & End Uses

AC power from the bus bar is distributed via a low-voltage community microgrid network to seven categories of end users, each with differentiated tariff structures managed by the CEC:

- Residential Electricity: Homes, schools, and health clinics are the priority load class, guaranteed minimum supply in all operating modes.
- E-Cooking as a Service (ECaaS): Smart induction cookers are leased to households on a pay-as-you-cook tariff, powered by the microgrid. This creates a predictable, schedulable demand load that improves grid stability while eliminating the health and economic burden of charcoal and wood cooking.
- E-Mobility Charging: Electric tricycle (e-tuk-tuk) charging points are sited at the CEC energy kiosk. E-tuk-tuks are leased to women-led market trader associations, creating an anchor demand that further stabilizes the diurnal load profile.
- Battery-as-a-Service (BaaS) Kiosks: Women-operated kiosks provide battery-swap services for small devices, lanterns, and mobile phones, generating a revenue stream while extending energy access to households not yet grid-connected.
- Cold Chain Storage: Solar-powered refrigeration units managed by women farmer cooperatives reduce post-harvest food losses and enable premium market access for perishable produce.
- Agro-Processing: Electric grain mills, crop dryers, and solar water pumps are powered by the microgrid, reducing fuel costs and enabling productive use of energy that is critical to rural economic development.
- Commercial and Industrial Loads: SMEs and light manufacturing facilities connect as anchor commercial customers, providing a stable revenue base for the CEC.

4.6 Layer 6 Circular Economy, Governance & Scale

The governance and circular economy layer ensure the long-term sustainability, replicability, and impact of SHEPA beyond the project lifetime:

- Certified E-Waste Recycling Partnership: A formal agreement with a certified African e-waste recycler is established at project inception, not at project end. Lithium recovers from second-life battery packs when they reach end of second life; silicon and silver are recovered from decommissioned PV panels. This creates an in-country recycling value chain documented and disseminated as a replicable model.
- Community Energy Cooperative (CEC): Legal registration, governance structure, board constitution, tariff-setting methodology, and financial management systems are established in Year 1 and operational by Year 2. The CEC becomes the legal owner of the infrastructure at project end, supported by a sustainability plan and linkage to the Blended Finance Mechanism.
- Blended Finance Mechanism: The project's business strategy maps CEC revenue models to EU-Africa Infrastructure Trust Fund instruments, African Development Bank co-financing, and Global Gateway investment corridors, enabling post-project financial sustainability without ongoing donor dependency.
- Regulatory & Policy Framework: SHEPA co-develops harmonized H_2 microgrid technical standards with LEAP-RE, supports CEC enabling legislation in partner countries, and contributes gender equity policy recommendations to national renewable energy frameworks.
- Open Knowledge Platform: All Digital Twin models, AI-EMS algorithms, training datasets, Life Cycle Assessment reports, and implementation guidelines are published open-access under Creative Commons BY licensing by Month 48, enabling any African project developer, government, or NGO to replicate the SHEPA model without proprietary barriers.

5. Project Objectives

1. Technical Innovation: Design, develop, and demonstrate optimized three-tier hybrid Solar PV-Battery-Hydrogen microgrid systems incorporating locally appropriate technologies and WEFE Nexus integration.
2. Deployment and Validation: Install and operate pilot systems in 5 communities across Kenya and partner countries, generating real-world performance data, Digital Twin models, and gender-disaggregated user feedback.
3. Circular Economy Implementation: Demonstrate a full cradle-to-grave lifecycle through the certified e-waste recycling partnership and circular economy design principles.
4. Governance Innovation: Pilot and evaluate the Community Energy Cooperative (CEC) model as a scalable governance and financing mechanism for African DRES.
5. Capacity Building: Train local technicians, women entrepreneurs, CEC board members, and community leaders in system operation, maintenance, and business model development.
6. Policy and Framework Development: Work with national and regional authorities to develop supportive regulatory frameworks, technical standards for hydrogen microgrids, and financing mechanisms aligned with EU-AU collaborative priorities.
7. Knowledge Dissemination: Publish open-access Digital Twin models, AI-EMS algorithms, operational learnings, and implementation guidelines through a dedicated platform to accelerate wider adoption across Africa.

6. WEFE Nexus Implementation

Nexus Dimension	Intervention	Mechanism	Outcome
Water	AWG units	Extract humidity from air for electrolysis and drinking supply	Zero groundwater depletion; safe water access
Energy	Hybrid microgrid	Solar + Battery + H_2 integrated dispatch via AI-EMS	24/7 reliable clean electricity for communities
Food	O_2 / Heat valorization; Fertilizer; Cold chain; E-tricycles	Aquaculture, greenhouse heating, NH_3 fertilizer, cold storage	Improved yields, reduced post-harvest loss
Ecosystem	Circular economy; No deforestation (ECaaS); Life cycle analysis	E-waste recycling; Replace charcoal; Biodiversity monitoring	Reduced land degradation and air pollution

7. Consortium and Partnership Strategy

SHEPA requires a balanced EU-African consortium to meet eligibility conditions (at least two legal entities from two different AU member states as beneficiaries) and to maximize evaluation scores for balanced involvement of European and African partners.

Proposed Partner Profile

- EU Technology Partners: Universities or research institutes with expertise in PEM electrolysis, Digital Twin modelling, and AI/ML energy systems.
- EU Industry Partners: Companies with experience in second-life battery systems, microgrid integration, or EU Renewable Energy Communities, aligned with Global Gateway Strategy.
- African Research Partners (2–3, from at least 2 AU member states): Universities and national research institutes in Kenya and partner countries, co-leading pilot site design and community engagement.
- African SMEs (2–3): Local manufacturers, installers, or service providers contributing to local value chain development per the call's explicit requirement for African SME participation.
- Community Energy Cooperative Pilot Sites: Identified through African research and NGO partners, covering urban/peri-urban/rural contexts.
- Certified E-Waste Recycler (1): African-based, formally certified recycling partner for project end-of-life circular economy compliance.
- Gender/Social Innovation Partner (1): NGO or social enterprise with proven track record in women's economic empowerment and community cooperative governance in Africa.

SHEPA will also engage EU Delegations in Kenya and partner countries and align with LEAP-RE and Global Gateway Africa investment programs throughout project implementation.

9. Conclusion

SHEPA represents a step-change in the design of Renewable Energy Valley projects for Africa. By combining a proven technical foundation — hybrid Solar PV and Green Hydrogen microgrids — with seven evidence-based innovations in storage architecture, WEFE Nexus integration, governance, circular economy, EU-AU diplomacy, digital intelligence, and gender transformation, SHEPA offers the EU Commission exactly what the call requires: a project that goes beyond the existing state of the art, is rooted in African communities, creates durable local value chains, and contributes measurably to the Global Gateway Strategy and AU Agenda 2063.

The project's commitment to open-access knowledge dissemination, gender-transformative outcomes, and certified circular economy compliance ensures it will serve as a replicable model for clean energy transition across the African continent — and a landmark example of EU-Africa Science Diplomacy in action.

Confidentiality Notice

This concept document contains proprietary information developed by the author(s). It is shared exclusively with invited recipients for consortium development purposes. It shall not be distributed without prior written consent.